REV.	DESCRIPTION	DATE
A	RELEASED	04/01/03
B	新增說明(新增)	11/03/03

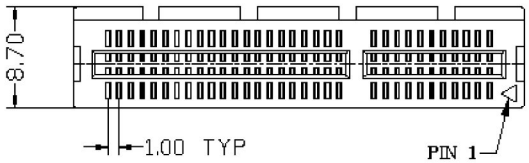

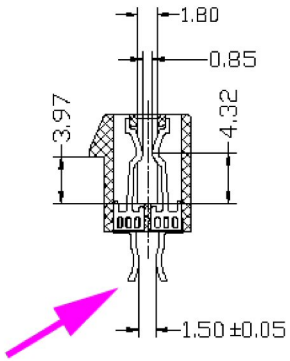

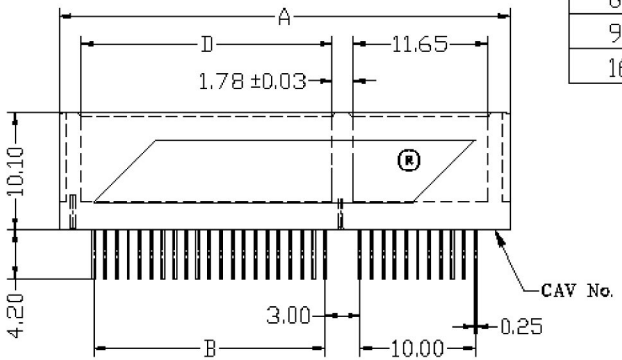

Dimension Manual

No. of Contacts	DIM 'A'	DIM 'B'	DIM 'C'	DIM 'D'
36	25.00	6.00	9.15	7.65
64	39.00	20.00	23.15	21.65
98	56.00	37.00	40.15	38.65
164	89.00	70.00	73.15	71.65

No. of Contacts	DIM 'E'	DIM 'F'	PIN 'G'
36	6.00	8.15	B17
64	20.00	22.15	B17,B31
98	37.00	39.15	B17,B31 B48
164	70.00	72.15	B17,B31 B48,BB1

NOTES

*Material:

Body: PBT,Glass Fiber 30%,
UL 94V-0 Rated. Color: White,Black. CAV. NO.:A~H.

Contacts: Brass.

Plating: Gold Plating Over Nickel on Contact Area; Tin/Lead Plating on Terminal.

*Mechanical:

Insertion Force: 1.15N Max Per Contact Pair;
Withdrawal Force: 0.15N Min Per Contact Pair;
Contact Retention Force: 4.9N Min Per Contact;

*Electrical Specification:

Contact Resistance: 30 Milliohms Max.
Current Resistance: 1.1 Ampere
Insulation Resistance: 1000 Megohms Min, At 500V AC.
Operating Temperature: -55'c to +105'c

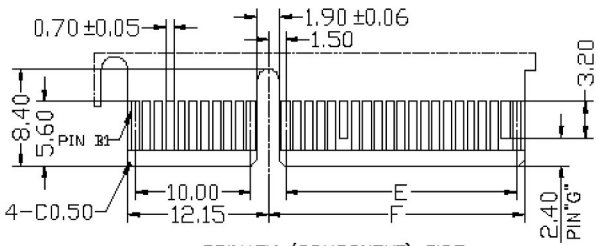

PRIMARY (COMPONENT) SIDE

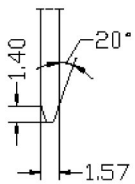

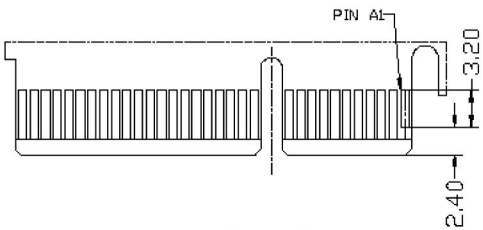

SECONDARY (SOLDER) SIDE

← I/O PANEL DIRECTION

檔名 F/Name	C:\3GIO\	T E L.		未註入公差 Tolerance Unless Otherwise Specified	設計 Designed	製圖 Drawing	檢圖 Reviewed	承認 Approved	單位 Unit	mm	比例尺 Scale	3:2	Third Angle Projection
品名 P/Name	PCI Express	F A X.		.X ~ ±0.35					日期 Date	11/03/03	Sheet	1 Of 1	
公司 CO/Name				.XX ~ ±0.25					圖名 Name	PCI Express 微PIN夾腳型 承接圖			REV
				.XXX ~ ±0.20					圖號 Drawing No.				B
				Angle ~ ± 3'									